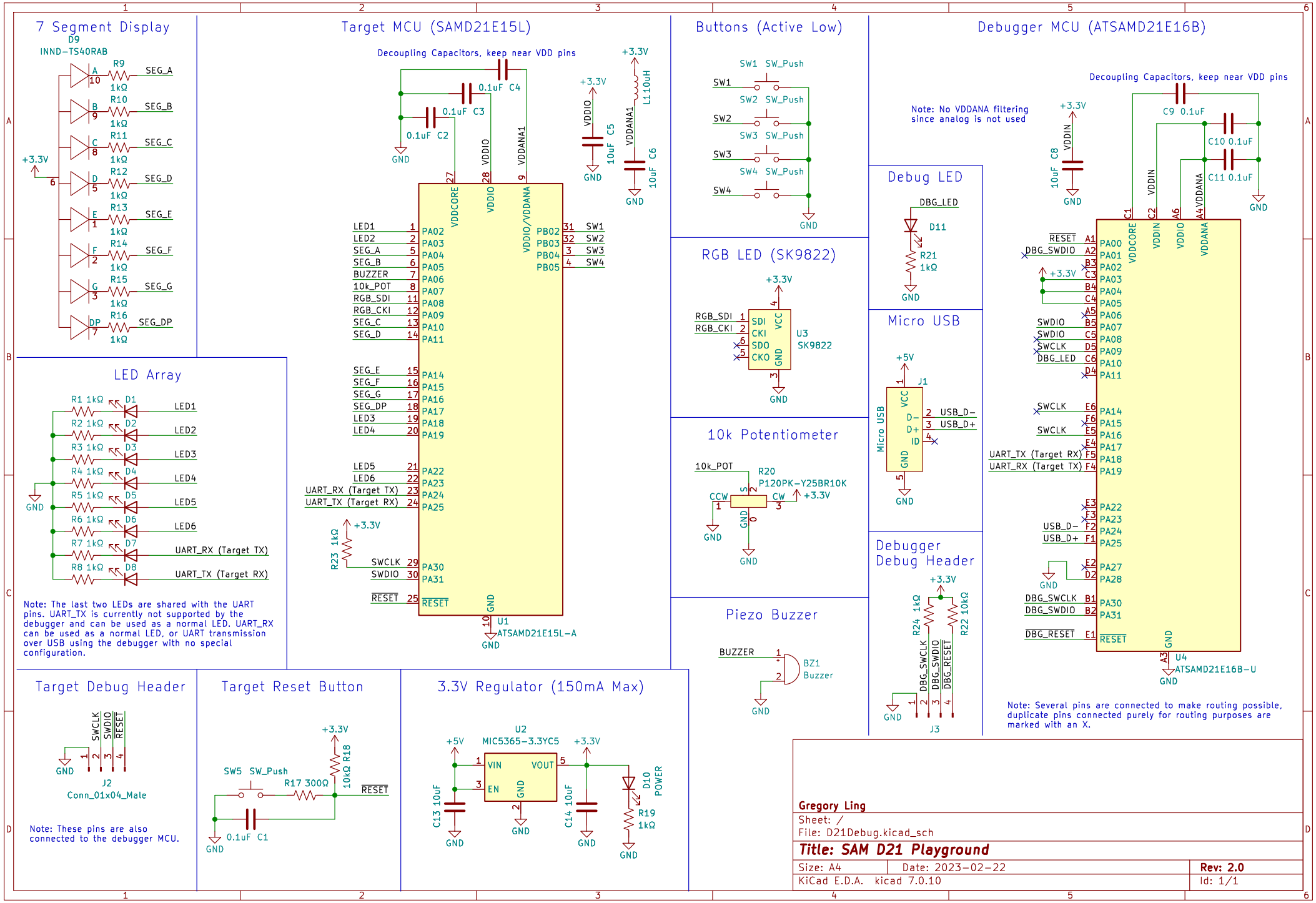
7 Segment Display
D9
INND-TS40RAB
R9 1kΩ SEG_A
R10 1kΩ SEG_B
R11 1kΩ SEG_C
R12 1kΩ SEG_D
R13 1kΩ SEG_E
R14 1kΩ SEG_F
R15 1kΩ SEG_G
R16 1kΩ SEG_DP
+3.3V
LED Array
R1 1kΩ D1 LED1
R2 1kΩ D2 LED2
R3 1kΩ D3 LED3
R4 1kΩ D4 LED4
R5 1kΩ D5 LED5
R6 1kΩ D6 LED6
R7 1kΩ D7 UART_RX (Target TX)
R8 1kΩ D8 UART_TX (Target RX)
GND
Note: The last two LEDs are shared with the UART pins. UART_TX is currently not supported by the debugger and can be used as a normal LED. UART_RX can be used as a normal LED, or UART transmission over USB using the debugger with no special configuration.
Target MCU (SAMD21E15L)
Decoupling Capacitors, keep near VDD pins
0.1uF C4
0.1uF C3
0.1uF C2
VDDIO
VDDANA1
VDDCORE
VDDIO/VDDANA
LED1 PA02
LED2 PA03
SEG_A PA04
SEG_B PA05
BUZZER PA06
10k_POT PA07
RGB_SDI PA08
RGB_CKI PA09
SEG_C PA10
SEG_D PA11
SEG_E PA14
SEG_F PA15
SEG_G PA16
SEG_DP PA17
LED3 PA18
LED4 PA19
LED5 PA22
LED6 PA23
UART_RX (Target TX) PA24
UART_TX (Target RX) PA25
SWCLK PA30
SWDIO PA31
RESET
PB02 SW1
PB03 SW2
PB04 SW3
PB05 SW4
R23 1kΩ
U1
ATSAMD21E15L-A
10uF C5
10uF C6
L1 10uH
Buttons (Active Low)
SW1 SW_Push
SW2 SW_Push
SW3 SW_Push
SW4 SW_Push
RGB LED (SK9822)
RGB_SDI
RGB_CKI
SDI
CKI
SDO
CKO
VCC
GND
U3
SK9822
10k Potentiometer
10k_POT
R20
P120PK-Y25BR10K
CCW
CW
Piezo Buzzer
BUZZER
BZ1
Buzzer
Debugger MCU (ATSAMD21E16B)
Note: No VDDANA filtering since analog is not used
Decoupling Capacitors, keep near VDD pins
C9 0.1uF
C10 0.1uF
C11 0.1uF
10uF C8
VDDIN
VDDANA
RESET PA00
DBG_SWDIO PA01
PA02
PA03
PA04
PA05
SWDIO PA06
SWDIO PA07
SWCLK PA08
DBG_LED PA09
PA10
PA11
SWCLK PA14
SWCLK PA15
PA16
UART_TX (Target RX) PA17
UART_RX (Target TX) PA18
PA19
USB_D- PA22
USB_D+ PA23
PA24
PA25
PA27
PA28
DBG_SWCLK PA30
DBG_SWDIO PA31
DBG_RESET
U4
ATSAMD21E16B-U
Debug LED
DBG_LED
D11
R21 1kΩ
Micro USB
J1
VCC
D-
D+
ID
GND
USB_D-
USB_D+
+5V
Debugger Debug Header
R24 1kΩ
R22 10kΩ
DBG_SWCLK
DBG_SWDIO
DBG_RESET
J3
Note: Several pins are connected to make routing possible, duplicate pins connected purely for routing purposes are marked with an X.
Target Debug Header
SWCLK
SWDIO
RESET
J2
Conn_01x04_Male
Note: These pins are also connected to the debugger MCU.
Target Reset Button
SW5 SW_Push
R17 300Ω
10kΩ R18
0.1uF C1
3.3V Regulator (150mA Max)
U2
MIC5365-3.3YC5
VIN
VOUT
EN
C13 10uF
C14 10uF
D10 POWER
R19 1kΩ
Gregory Ling
Sheet: /
File: D21Debug.kicad_sch
Title: SAM D21 Playground
Size: A4
Date: 2023-02-22
Rev: 2.0
KiCad E.D.A. kicad 7.0.10
Id: 1/1